MSE of Kentucky, Inc.

Engineers/Architects/Planners

624 Wellington Way
Lexington,
Kentucky 40503
859-223-5694
FAX 859-223-2607
E-Mail: mseinc@mselex.com

Addendum No. 2
London-Laurel Economic
Development Authority London,
Laurel County, KY
Speculative Building for Greta Lane
Bid Date: June 26, 2023
Issue Date: June 21, 2023

The following additions, deletions, changes or revisions are issued herewith and become a part of the Project Documents. Addendum No. 2 consists of seven (7) 8.5x11 pages, and seven (7) 24x36 sheets.

General Note to Bidders:

Item 1 – Per Sheet "TYP" Typical Section Site/Civil, in "Pavement Requirements" – future asphalt paving is not in contract. The finished surface for pavement in contract is the 4" DGA top surface, which is indicated in road and driving surface grading and profile.

Item 2 – The Owner, London-Laurel Economic Development Authority is tax exempt. Bidders shall exclude sales tax in their bid for the following items:

PEMB building package
Doors and Storefront package
Concrete Masonry Units, masonry package
LED Lighting package.

Direct purchase orders shall be handled post bid, and the Owner shall also be allowed to finalize any other direct purchase orders post bid via a deductive change order.

Revisions to Specifications

Item 3 – Refer to attached 00310 Bid Schedule, revised to remove references to alternates. There are no alternates in this project.

Item 4 – Refer to 13121 Pre-Engineered Buildings, Part 1.05 Manufacturers, add:

Kirby Building Systems
American Standard Buildings
ACI Building Systems
Trident Metal Buildings

Item 5 – Refer to 04200 Unit Masonry – Part 2 Submittals, delete item A.1 – replace with "provide an 8' long by height of CMU wall installed, and stained with white stain to have reviewed by Architect and Owner to confirm coloring of CMU wall. To clarify – white color CMU is not required from Manufacturer. White coloring will be via stain after installing. Refer to specification 09900 Painting, Item 3.7.B.3 for Concrete Block filler and stain.

Item 6 – Refer to specification 13121 Pre-Engineered Building, Item 2.03.A.8 delete in its entirety. Delete reference to Factory Mutual design, provide PEMB roofing as required by contract documents.
Item 1.06.E – revise roof live load to 20 psf reducible. (matching Structural sheet)
revise ground snow load to 15 psf. (matching Structural sheet)
revise collateral load to 5 psf + 3 psf (matching Structural sheet)
revise Roof wind load, use 115 mph. (matching Structural sheet)
Item 1.06.F – To clarify - L/240 of span is for wall and roof panels systems, specified load deflection.
Item 1.08.A.2 – revise Weathertightness warranty to Standard type II (20 year).
Item 2.03.C – To clarify – Vee Rib, or Reverse rolled PBR is acceptable.

Item 2.02.E – To clarify – PEMB Manufacturer shall chose a secondary roof structure type (purlins or bar joists) and shall make the final determination based on their system and requirements. This is to be a speculative building; the end occupant and use of structure is unknown at this time. Anticipate lighting, future sprinkler system, and other types of attachments in the future.

Item 7 – Refer to specification 08361 Sectional Insulated Overhead Doors, Part 2.01.C, revise to provide (3) 24x12 acrylic windows in Door #8 only. In part 2.04 Hardware, revise part D electric motor to be RSX in lieu of SEL model.

Revisions to Civil Plan Sheets

Item 8 – Refer to attached sheet EC-2 dated 6/20/23 with revised erosion control notes. This sheet replaces previous sheet and becomes a part of the contract documents

Item 9 – Provide concrete patio concrete as shown on Architectural sheet plan A/A-3. Provide 4" concrete sidewalk/patio at front entry, w/6x6 W1.4xW1.4 wwf over 4" crushed stone base.

Item 10 – Provide 6" PVC downspout adapters to 6" PVC piping to connect downspouts underground along west and east sides of PEMB. Run this underground piping to the south to daylight.

Item 11 – Provide the construction entrance as shown in the Civil sheets.

Revisions to Structural Plan Sheets

Item 12 – Refer to attached Sheets F1.1, F2.1, F2.2 dated 6/16/23 revised to remove hairpins and provide continuation of reinforcing through column piers. These sheets replace previous sheets and become a part of the contract documents.

Item 13 – Refer to Sheet F2.1, delete detail 8/F2.1 (shows dock leveling pad) and provide detail 7/F2.1 at future loading docks only. Interior slabs are future work, not in contract. Stem wall to be provided at future loading docks only, coordinate exterior grades with Civil after foundations are installed.

Item 14 – Refer to Structural sheets and details, the future slab (not in contract) will be 6" thick, coordinate with finished top of stone base (subgrade elevation) to be 6" below future top of slab. The crushed stone base shall be 6" thick in lieu of 4". Refer to Architectural wall sections.

Item 15 – Refer to Sheet F1.1, provide an expandable end wall at Column line 1. Replace footing type at column location B1, C1, D1 with F1 footing.

Revisions to Architectural Plan Sheets

Item 16 – Regarding white stained concrete block, to clarify – the CMU will be white stained after it is laid, refer to Masonry specification.

Item 17 – Refer to detail A/A-3, the dimensional notes indicating "full height metal panels" is in reference to the exterior of the building, where the CMU wainscotting terminates and exterior metal panels continue. To clarify this project does not have interior metal panels, only exterior metal panels.

Item 18 – To clarify – exterior metal wall panels shall be 24 gauge.

Item 19 – Refer to detail A/A4 – PEMB manufacturer shall provide spandrel or other supportive and anchoring means to provide code compliant top of masonry connection at CMU bond beam.

Item 20 – Refer to sheet A-6, revise dimension for dock sectional overhead doors to be 9'x12' to match schedule. Delete reference to 9'x10'.

Revisions to Mechanical Electrical

Item 21 – Refer to attached one-page addenda 6/20/23 for Mech/Elec.

Item 22 – Refer to attached sheets M-1, M-2, M-3 dated 6/16/23 with revisions to lighting fixture schedule and layout. These sheets replace previous sheets and become a part of the contract documents

Item 23 – Refer to sheet M-2 for locations and quantities of louvers and exhaust fans. Refer to sheet M-3 for descriptions (make/model) of the louvers and exhaust fans.

END OF ADDENDUM NO. 2

6-20-2023 ADDENDUM

SPECULATIVE BUILDING

LONDON – LAUREL COUNTY

INDUSTRIAL DEVELOPMENT AUTHORITY

Electrical Documents:

Reference Panel A: Change AIC rating from 10,000 to 14,000,

Reference Panel AA: Change AIC rating from 14,000 to 24,000.

Reference Panel AA: Add surge protection, 300 KA. Use SASD Type 1 suppression device.

Provide Electrical Metering as required by AEP.

An external power disconnect is not required.

Tom Wilson, Jr. PE
AFA Engineering, LLC
706 Westland Drive
Lexington, KY 40504
twilson@afaengr.com
859 913 4229

SECTION 00310 - BID SCHEDULE

Proposal of _____ (hereinafter called "BIDDER"), organized and existing under the laws of the State of _____doing business as _____* to the London-Laurel County Economic Development Authority (hereinafter called "OWNER").

In compliance with your Advertisement for Bids, BIDDER hereby proposes to perform all WORK for the construction of Speculative Building on Greta Lane in strict accordance with the CONTRACT DOCUMENTS, within the time set forth and the prices stated below.

By submission of this BID, each BIDDER certifies, and in the case of a joint BID, each party thereto certifies as to its own organization, that this BID has been arrived at independently, without consultation, communication, or agreement as to any matter relating to this BID with any other BIDDER or with any competitor.

BIDDER hereby agrees to commence Work under this contract on or before a date to be specified in the Notice to Proceed and to complete the Project within one hundred eighty (180) consecutive calendar days following the Notice to Proceed. BIDDER further agrees to pay as liquidated damages, the sum of $600.00 for each consecutive calendar day thereafter as provided in the General Conditions and the Special Conditions.

BIDDER agrees to perform all the WORK described in the CONTRACT DOCUMENTS for the lump sum contained in the following Bid Schedule.

*Insert "a corporation", "a partnership", or "an individual" as applicable.

Item	Description	Unit	Cost of Item
1.	Main Building with Office Entrance	LS	$
2.	Mechanical	LS	$
3.	Electrical	LS	$
4.	Site Grading	LS	$
5.	Testing Allowance	LS	$ 20,000
6.	All Other Miscellaneous Costs	LS	$
TOTAL COST OF ITEMS 1 - 6			**$**

The bid prices shall include all labor, materials, overhead, profit, insurance, and other costs necessary to install the finished work of the several items called for. Changes shall be processed in accordance with the General Conditions.

This is an invitation for offer to bid, not an offer to enter into a contract. If a bid is accepted, the contract will be awarded to the lowest total cost of Items 1 – 6 in the OWNER's best interest.

Accompanying this Proposal is a certified check or standard Bid Bond in the sum of_____ Dollars ($), in accordance with the Information for Bidders. The BIDDER, by submittal of this Bid, agrees with the OWNER that the amount of the bid security deposited with this Bid fairly and reasonably represents the amount of damages the OWNER will suffer due to the failure of the BIDDER to fulfill his agreements as provided in this Proposal. _____

Addenda to the Drawings and Specifications issued heretofore are hereby acknowledged by the undersigned as being:

No. _____ Date: _____ No. _____ Date: _____
No. _____ Date: _____ No. _____ Date: _____

BIDDER understands that the OWNER reserves the right to reject any or all Bids and to waive any informalities in the Bidding.

BIDDER agrees that this Bid shall be good and may not be withdrawn for a period of sixty (60) calendar days after the actual date of bid opening.

Within ten (10) calendar days after receiving written notice of the acceptance of this Bid by the OWNER, the Bidder will execute and deliver to the OWNER four (4) copies of the Agreement and such other required Contract Documents.

BIDDER: (Name of Company or Partnership)		
By: (Signature)		(Date)
(Print Name)		(Title)
(Street Address/P.O. Box)		(Phone Number)
(City, State, Zip)		
(Email Address)		
Attested By:	(Signature)	(Date)
Seal (If bid is by a corporation)		

END OF SECTION

Plot Date: 6/20/2023 6:15 PM

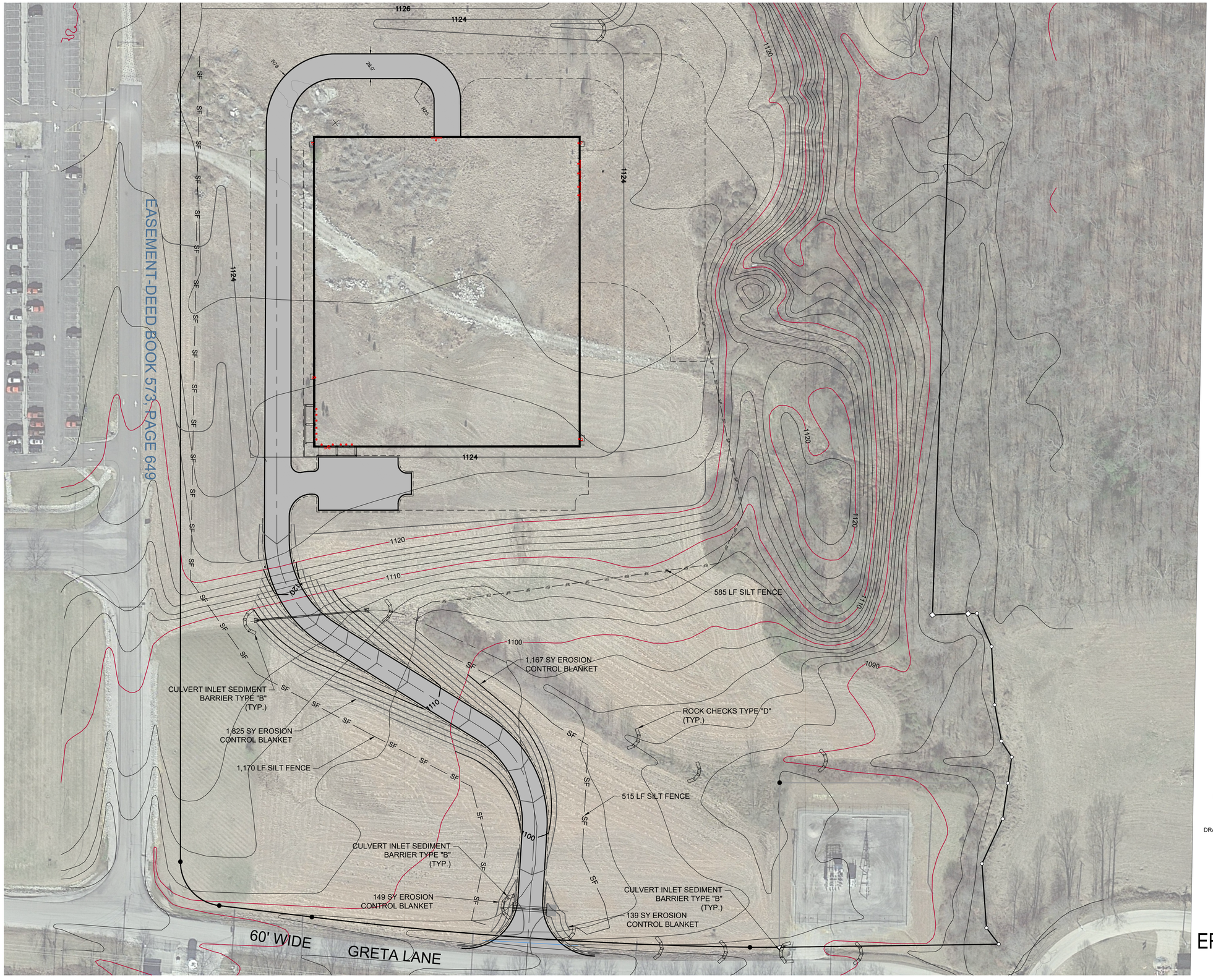

GRAPHIC SCALE

60' 0 30' 60' 120'

SCALE: 1" = 60'

DRAWING IS TO TRUE SCALE WHEN PAPER SIZE = 24"x36"

EROSION CONTROL PLAN

SPECULATIVE BUILDING
FOR
LONDON - LAUREL COUNTY
INDUSTRIAL DEVELOPMENT AUTHORITY
LAUREL COUNTY, KENTUCKY

DATE	REVISION	BY
6/20/23	Revised Erosion Control Notes	

PROJECT NO. 2049-112
DESIGNED BY: DRF/R.
DRAWN BY: J.D.W.
CHECKED BY: J.D.W.
REVIEWED BY: DRF/R.
DATE: JUNE 2023
SCALE: AS SHOWN

Design Documents

The design professional assumes sole responsibility and liability for problems which arise from failure to follow these plans, specifications and the contract documents.

Copyright ©

These drawings and specifications are the property and copyright of the design firm and shall not be reused on other projects or transferred to any other party without their written permission. Any reproduction, in whole or in part, without the written permission of the design firm is prohibited by law.

MSE OF KENTUCKY, INC.
Engineers
Architects
Planners
624 Wellington Way
Lexington, Ky. 40503
www.mselex.com
Phone: (859)223-5694
Fax: (859)223-2607

DRAWING NO.

EC-2

SHEET OF

M:\PROJECTS\LONDON-LAUREL IDA-GRETA LANE\GRETA LANE PAD AND ACCESS ROAD\WORKING\GRETA LANE PAD AND ACCESS ROAD 6-2-23.DWG

M:\PROJECTS\London-Laurel IDA-GRETA LANE\Grete Lane Pad and Access Road\Working\Grete Lane Pad and Access Road 6-2-23.dwg 6/20/2023 6:15:04 PM, DWG To PDF.pc3

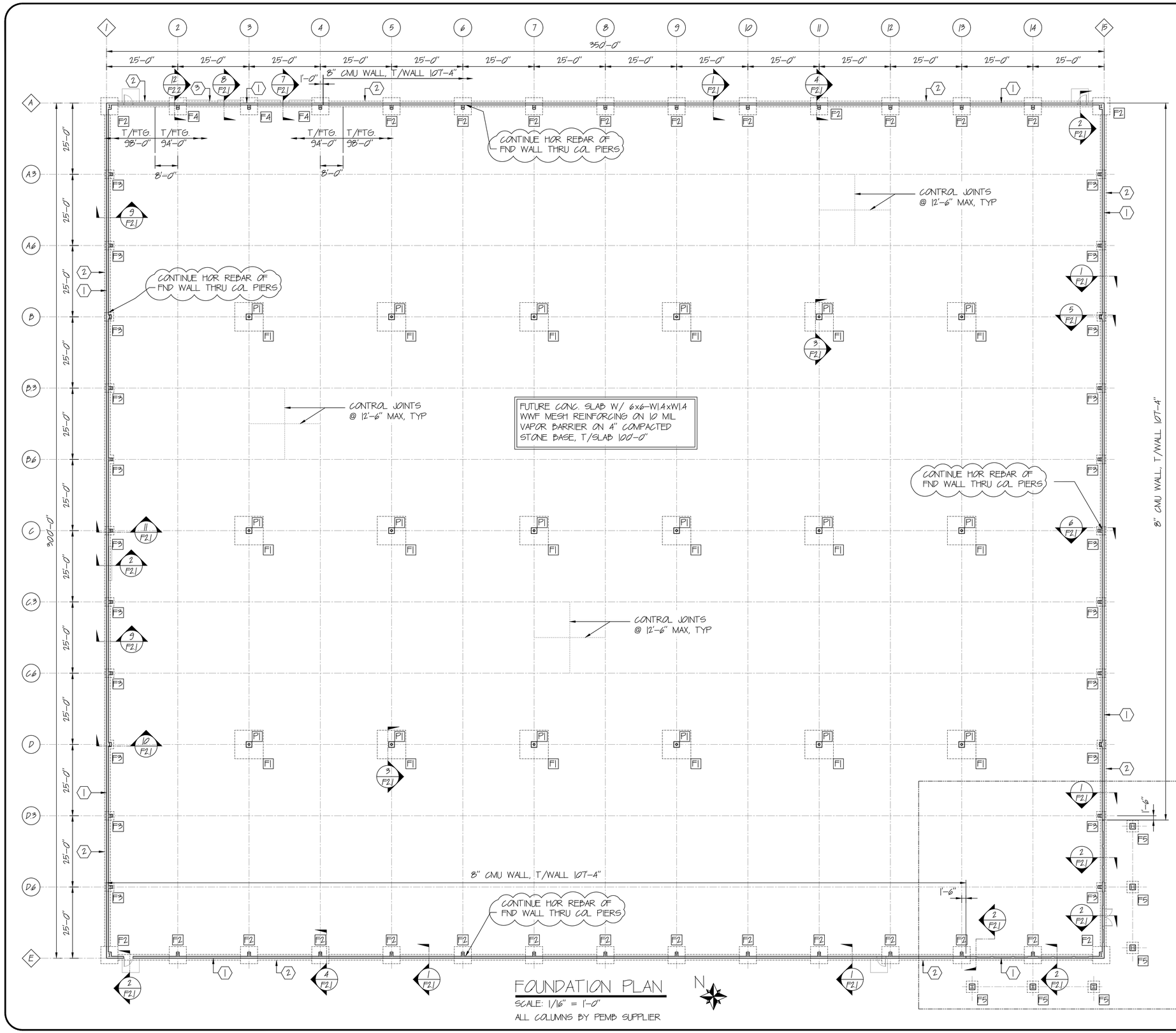

FOUNDATION PLAN

SCALE: 1/16" = 1'-0"

ALL COLUMNS BY PEMB SUPPLIER

DRAWING NOTES

1. 8" CONC. KNEEWALL, T/KNEEWALL = 100'-0", T/KNEEWALL = 99'-4" @ OPENINGS
2. CONC. FOOTING 2'-0" WIDE x 1'-0" HIGH W/ (3) #4's CONT. @ BTM. T/GRADE BEAM = 98'-0"
3. CONC. FOOTING 2'-0" WIDE x 1'-0" HIGH W/ (3) #4's CONT. @ BTM. T/GRADE BEAM = 94'-0"

FOOTING SCHEDULE

FND MARK	FND SIZE (L x B x D)	REINFORCING BOTT, E.W.	TOP OF FOOTING
F1	10'-0"x10'-0"x2'-0"	(13) - #6	97'-4"
F2	6'-0"x6'-0"x1'-0"	(7) - #5	98'-0"
F3	3'-0"x3'-0"x1'-0"	(4) - #4	98'-0"
F4	6'-0"x6'-0"x1'-0"	(7) - #5	94'-0"
F5	4'-0"x4'-0"x1'-0"	(5) - #4	98'-0"
P1	2'-0"x2'-0"x2'-0"	(8) - #5 VER	99'-4"

FOUNDATION AND FOOTING DESIGN BASED UPON A SOIL BEARING PRESSURE OF 2000 PSF PER SOILS REPORT BY COOKE ENGINEERING AND TESTING COMPANY, PROJECT 1776-22-008 DATED SEPT 2, 2022.

STATE OF KENTUCKY
TRACY S. GRIFFITH
19220
REGISTERED PROFESSIONAL ENGINEER
6-16-23

ASG LLC
AMERICAN STRUCTURAL GROUP
CONSULTING STRUCTURAL ENGINEERS
225 SOUTH MAIN STREET
MONROE, OHIO 45050
PH: 513.403.8000
WWW.ASG-ENG.COM
"Value Engineering the First Time"

REV	DESCRIPTION	DATE
6		
5		
4		
3		
2		
1	ELIMINATED HAIRPINS	06/16/23
0	PERMIT ISSUE	06/07/23

PROJECT
SPECULATIVE BUILDING FOR
LONDON - LAUREL COUNTY
INDUSTRIAL DEVELOPMENT AUTHORITY
LAUREL COUNTY, KENTUCKY

CLIENT
MSE, INC.
624 WELLINGTON WAY
LEXINGTON, KY. 40514
PH: 859-223-5654

FOUNDATION PLAN

CUSTOMER JOB NO.:	———
CUSTOMER:	MSE
DRAWN BY:	GSM
DATE:	05.19.23
CKD. BY:	TSM
DATE:	DATE
ASG JOB NO.	23.1193
DRAWING FILENAME:	1193F1.1
DRAWING NO:	F1.1

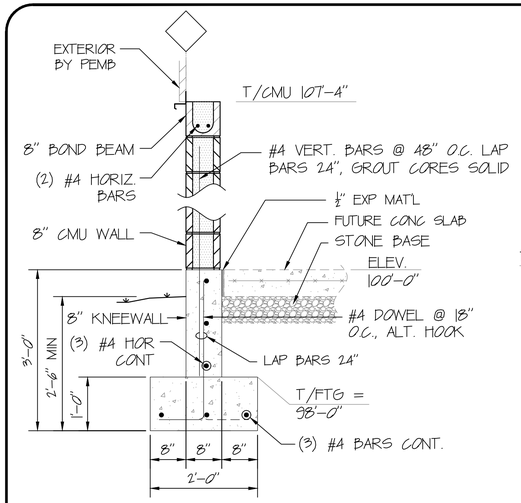

SECTION 1 (F1.1)
SCALE: 3/4"=1'-0"

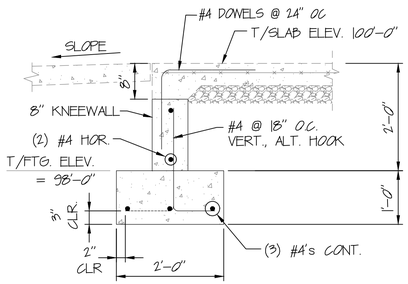

AT DOOR & STOREFRONT

SECTION 2 (F1.1)
SCALE: 3/4"=1'-0"

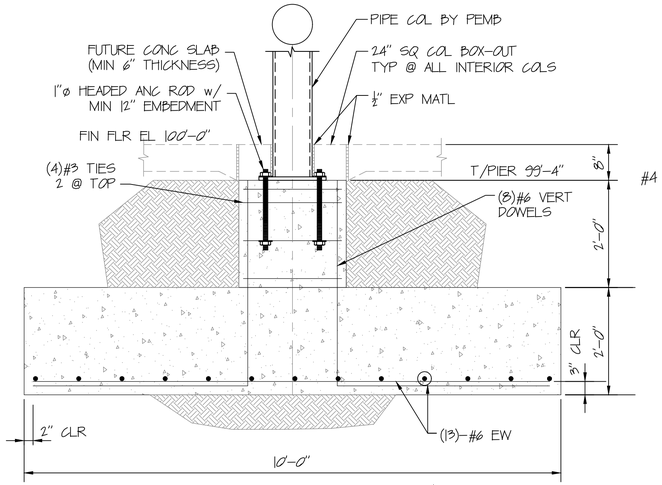

SECTION 3 (F1.1)
SCALE: 3/4"=1'-0"

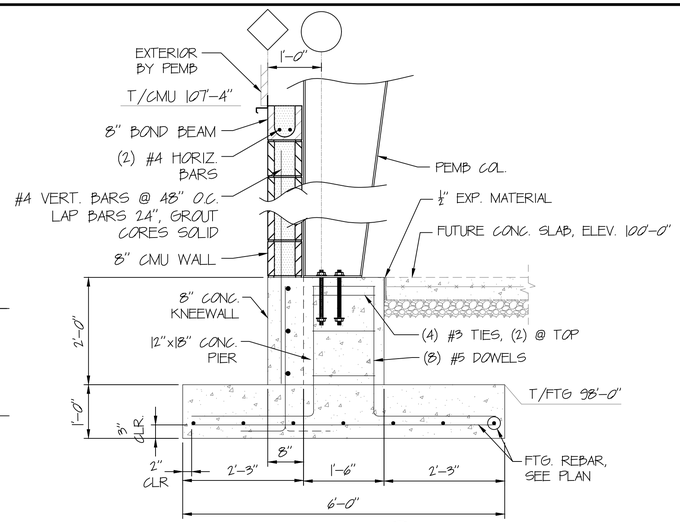

SECTION 4 (F1.1)
SCALE: 3/4"=1'-0"

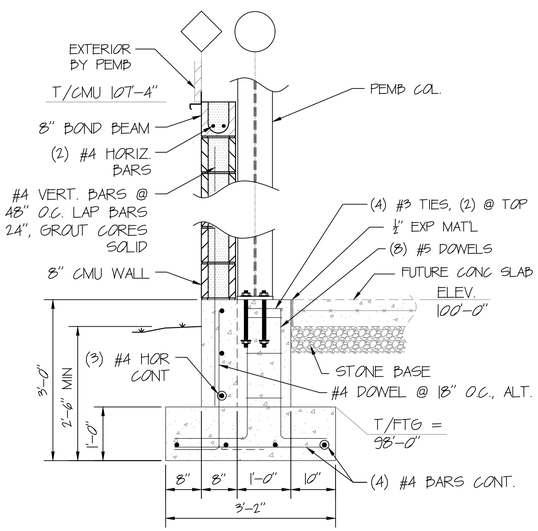

SECTION 5 (F1.1)
SCALE: 3/4"=1'-0"

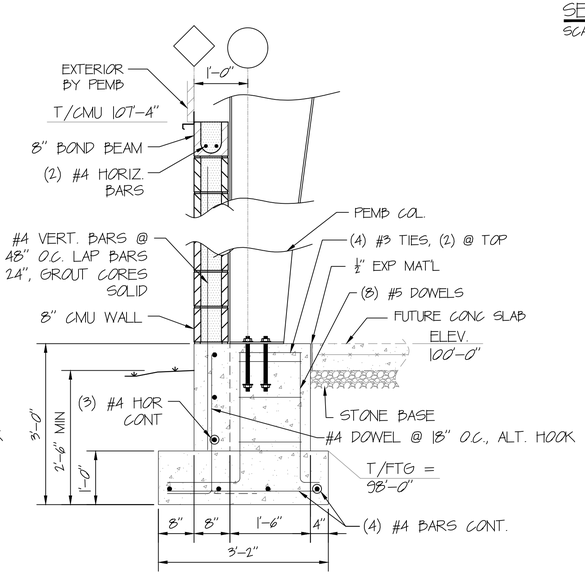

SECTION 6 (F1.1)
SCALE: 3/4"=1'-0"

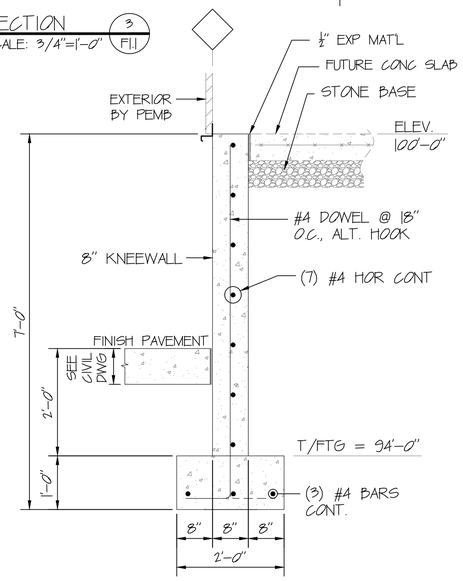

SECTION 7 (F1.1)
SCALE: 3/4"=1'-0"

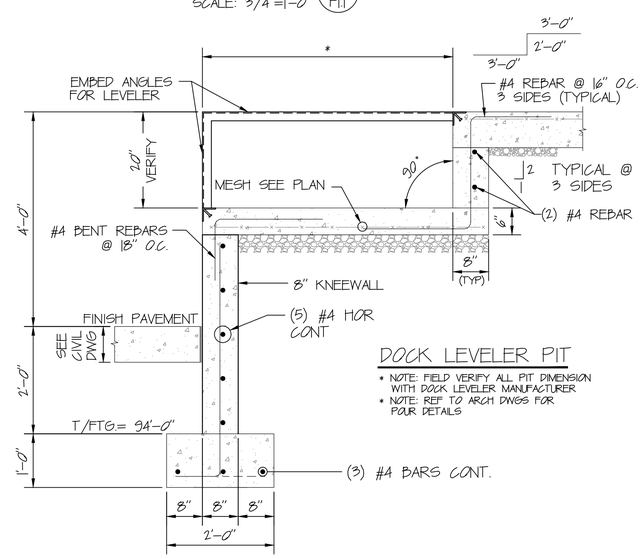

DOCK LEVELER PIT

* NOTE: FIELD VERIFY ALL PIT DIMENSION WITH DOCK LEVELER MANUFACTURER
* NOTE: REF TO ARCH DWGS FOR POUR DETAILS

SECTION 8 (F1)
SCALE: 3/4"=1'-0"

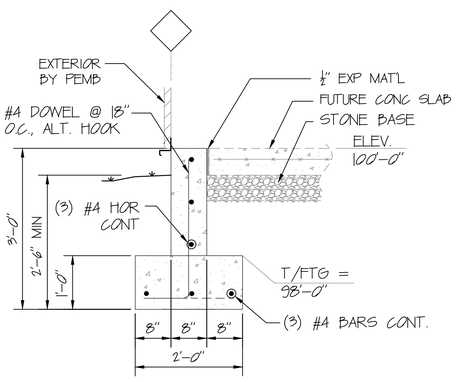

SECTION 9 (F1.1)
SCALE: 3/4"=1'-0"

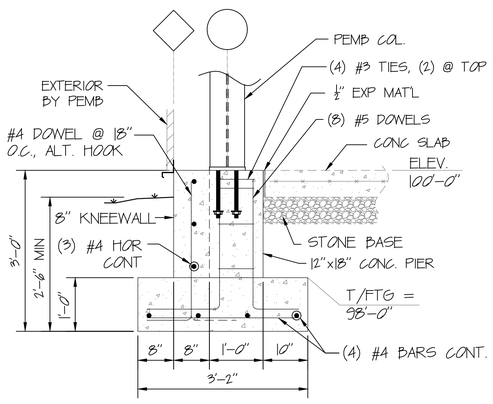

SECTION 10 (F1.1)
SCALE: 3/4"=1'-0"

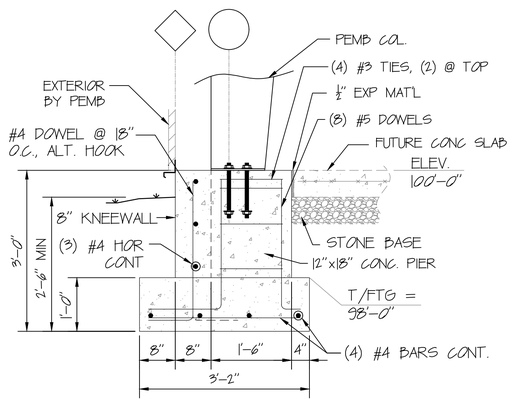

SECTION 11 (F1.1)
SCALE: 3/4"=1'-0"

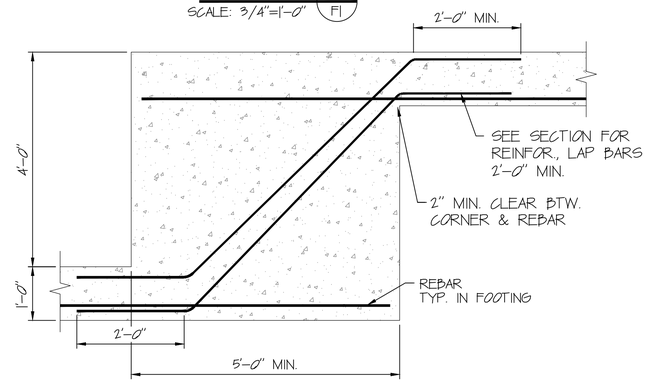

STEP IN FTG. DETAIL
SCALE: 3/4"=1'-0"

STATE OF KENTUCKY
TRACY S. MILLER
6-16-23
19220
REGISTERED PROFESSIONAL ENGINEER

ASG LLC
AMERICAN STRUCTURAL GROUP
CONSULTING STRUCTURAL ENGINEERS
225 SOUTH MAIN STREET
MONROE, OHIO 45050
(513) 423-2000
WWW.ASG-ENG.COM
"Value Engineering the First Time"

REV	DESCRIPTION	DATE
6		
5		
4		
3		
2	ELIMINATED HAIRPINS	06/16/23
1	PERMIT ISSUE	05/31/23
0		

PROJECT
SPECULATIVE BUILDING FOR
LONDON - LAUREL COUNTY
INDUSTRIAL DEVELOPMENT AUTHORITY
LAUREL COUNTY, KENTUCKY

CLIENT
MSE, INC.
624 WELLINGTON WAY
LEXINGTON, KY. 40514
PH: 859-213-5694

FOUNDATION DETAILS

CUSTOMER JOB NO.:	-------
CUSTOMER:	MSE
DRAWN BY:	GSM
DATE:	05.19.23
CKD. BY:	TSM
DATE:	DATE
ASG JOB NO.	23119 3
DRAWING FILENAME:	119 3F2.1
DRAWING NO:	F2.1

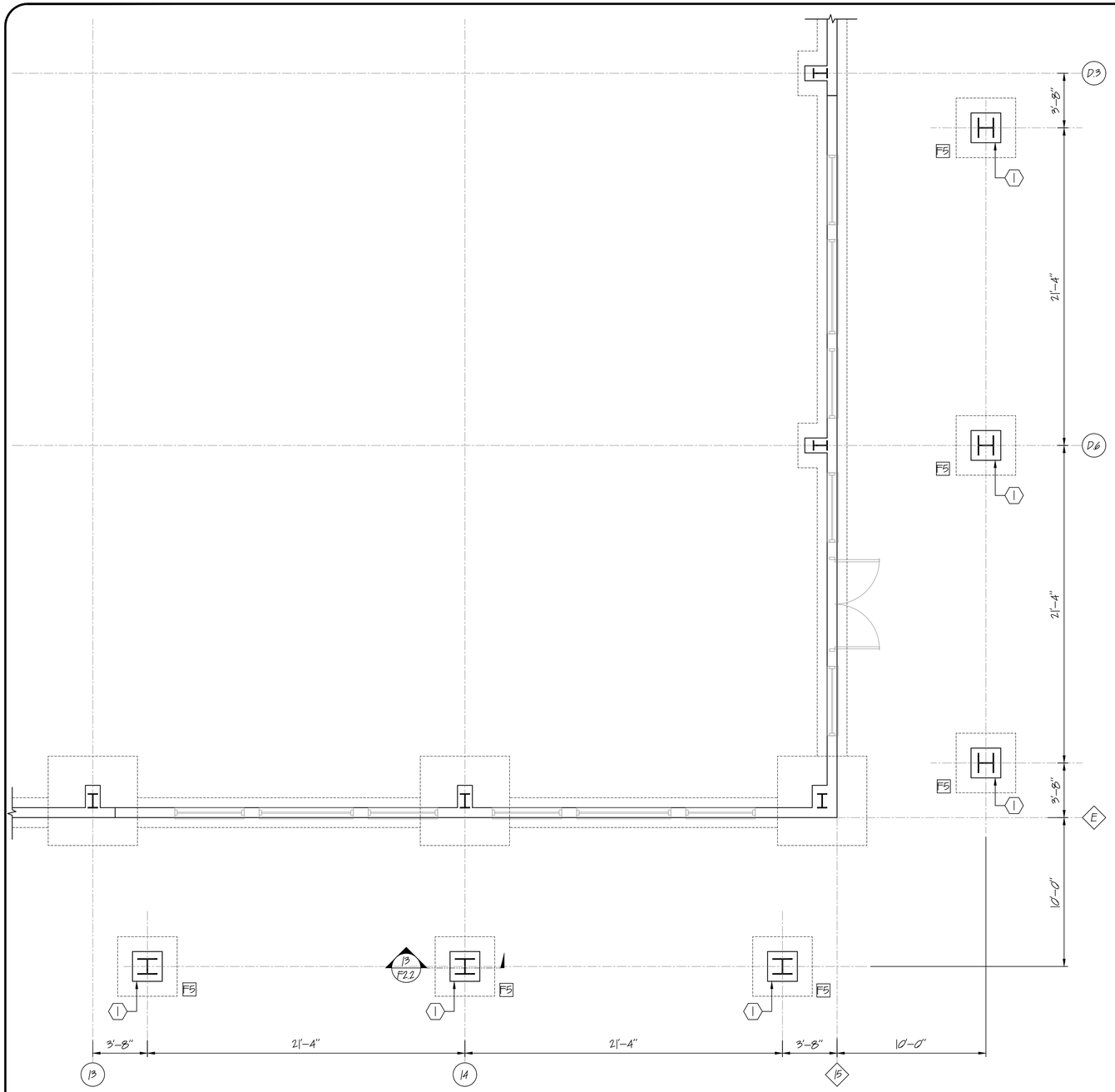

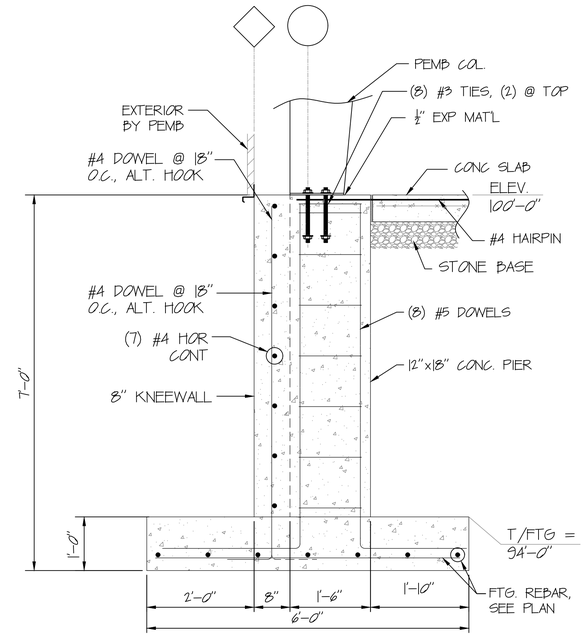

SECTION 12 / F1.1
SCALE: 3/4"=1'-0"

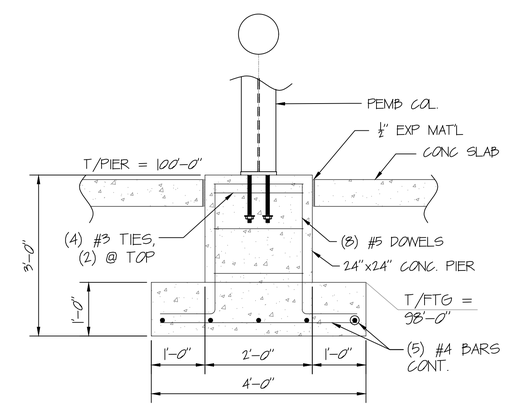

SECTION 13 / F2.2
SCALE: 3/4"=1'-0"

DRAWING NOTES

(1) 24"x24" CONC. PIER, T/PIER = 100'-0",

ENLARGED PLAN

SCALE: 1/4" = 1'-0"
ALL COLUMNS BY PEMB SUPPLIER

N

FOOTING SCHEDULE			
FND MARK	FND SIZE (L x B x D)	REINFORCING BOTT, E.W.	TOP OF FOOTING
F5	4'-0"x4'-0"x1'-0"	(5) - #4	98'-0"

FOUNDATION AND FOOTING DESIGN BASED UPON A SOIL BEARING PRESSURE OF 2000 PSF PER SOILS REPORT BY ALT & WITZIG.

STATE OF KENTUCKY
TRACY S. MOORE
19220
REGISTERED PROFESSIONAL ENGINEER
6-16-23

ASG LLC
AMERICAN STRUCTURAL GROUP
CONSULTING STRUCTURAL ENGINEERS
225 SOUTH MAIN STREET
NORWOOD, OHIO 45212
PH 513-402-7600
WWW.ASG-ENG.COM
"Value Engineering the First Time"

REV.	DESCRIPTION	DATE
6		
5		
4		
3		
2		
1	ELIMINATED HAIRPINS	06/07/23
0	PERMIT ISSUE	06/07/23

PROJECT
SPECULATIVE BUILDING FOR
LONDON - LAUREL COUNTY
INDUSTRIAL DEVELOPMENT AUTHORITY
LAUREL COUNTY, KENTUCKY

CLIENT
MSE, INC.
624 WELLINGTON WAY
LEXINGTON, KY. 40504
PH: 859-223-5604

ENLARGED PLAN & DETAILS

CUSTOMER JOB NO.:	———
CUSTOMER:	MSE
DRAWN BY:	GSM
DATE:	05.19.23
CKD. BY:	TSM
DATE:	DATE
ASG JOB NO.	23119.3
DRAWING FILENAME:	119.3F2.2

DRAWING NO:

F2.2

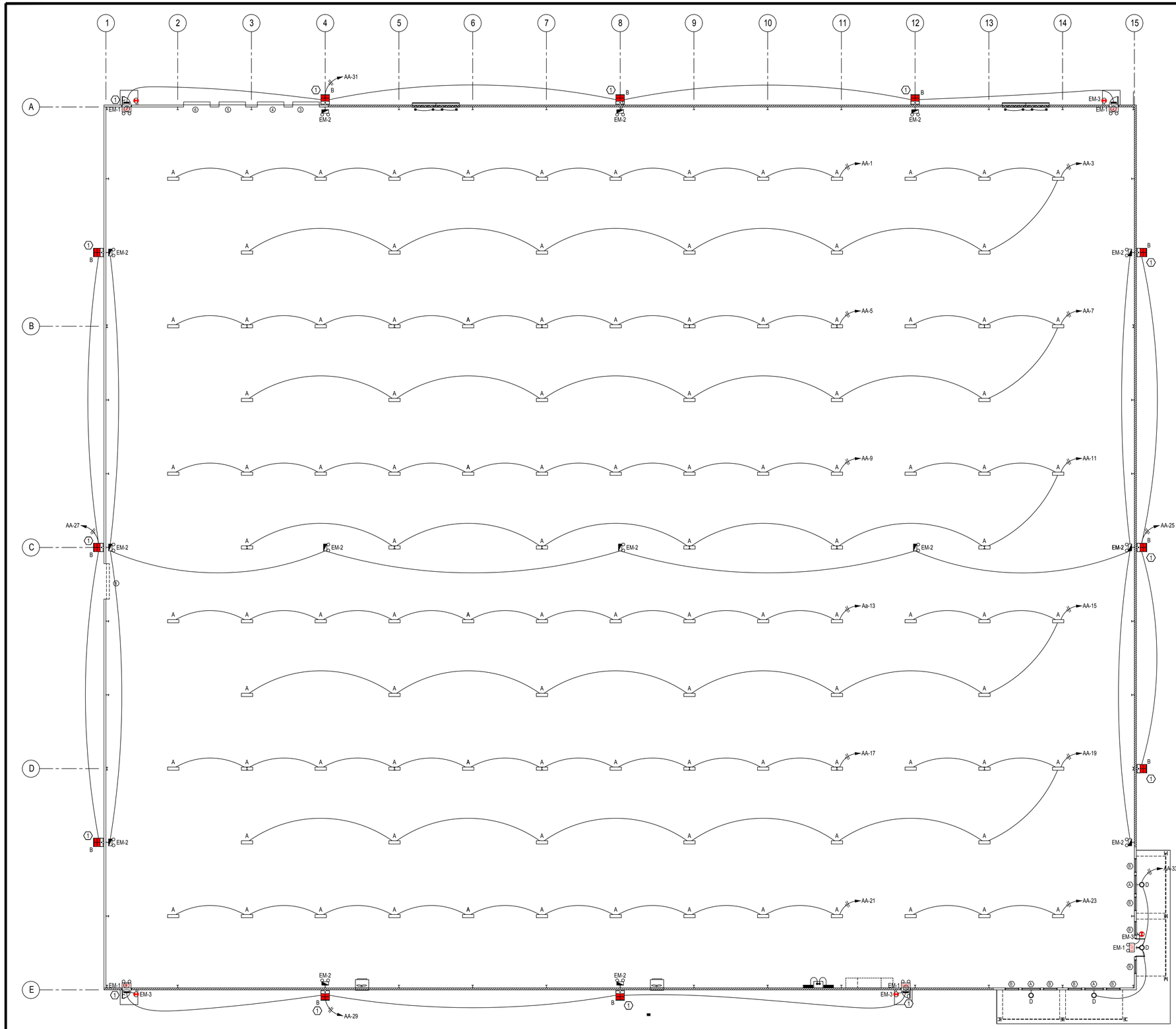

FIRST FLOOR LIGHTING PLAN

SCALE: 1/16" = 1'-0"

Type A Revised | Westgate LLHB4-410W-MP -50K-D SCL-GSY10 10ft cable hangers | 46 3/4" x17 ¾" 2" , 53,3000 lumens, 410W,50K 50,000 rated hours, 120-277V, Wide beam angle, 0-10 dimmable, 5 yr warranty , wattage adjustable. | Lamps: LED | Watts: 410W

LIGHTING FIXTURE SCHEDULE

TYPE	MANUFACTURER & MODEL #	DESCRIPTION	LAMPS	WATTS
A	MAX LITE ~~BLHE3-400UF-50 ML CAVO SU15 HANGING KIT~~ Due to discontinue, See above	~~46"x15" HIGH LUMEN LED PANEL, DELIVERS 54,000 LUMENS, L70 LUMEN MAINTENANCE OF 100,000 HOURS, 120-277V, 2.5 kV SURGE PROTECTION, 10 YEARS WARRANTY. 5K ADJUSTABLE COLOR.~~	LED	~~300 W~~
B	MAX LITE WCOP120UWCSBPC	DIE CAST ALUMINUM HOUSING WITH CORROSION RESISTANT POLYESTER PAINT FINISH WALL PACK LIGHT 17,500 LUMENS, IMPACT RESISTANT BOROSILICATE GLASS LENS, DIRECT WALL MOUNT, 5 YEAR WARRANTY. SELF CONTAINED PHOTO ELECTRIC SWITCH.	LED	120 W
D	BOCK LIGHTING:SN512 EGo igi LAC12 40K GN 17 AGO	GOOSENECK, WALL MOUNTED, 1500-2400 LUMENS, INDOOR/OUTDOOR COMPATIBLE, CRI 80, GUARD COMPATIBLE WITH 31DCG CAST GUARD AND 31 WIREGUARD.	LED	25 W
EM-1	MAX LITE EX-RW	EMERGENCY EXIT LIGHT, HIGH IMPACT UV STABILIZED FLAME RATED THERMOPLASTIC, ADJUSTABLE COMBO HEAD, WHITE FINISH, 5 YEAR WARRANTY	LED	N/A
EM-2	MAX LITE EML-2HW	EMERGENCY LIGHT, 2 HEADS, BATTERY BACKUP, HIGH IMPACT UV STABILIZED FLAME RATED THERMOPLASTIC, WHITE FINISH, 5 YEAR WARRANTY.	LED	N/A
EM-3	MAX LITE SECR12U-50BPCEM0	EMERGENCY LIGHT, DIE CAST ALUMINUM HOUSING WITH CORROSISION RESISTANT POWDER COAT FINISH, 1,275 LUMENS IN AC MODE, 350 LUMENS IN BATTERY MODE, OSHA CERTIFIED, 5 YEAR WARRANTY.	LED	15W

NOTE :
LIGHT FIXTURES SHALL BE AS SPECIFIED. ANY SUBSTITUTIONS MUST GET PRIOR APPROVAL IN WRITING BY THE ARCHITECT & ENGINEER. ALL SUBSTITUTION REQUESTS SHALL BE SUBMITTED TO THE ARCHITECT & ENGINEER FOR REVIEW 10 DAYS PRIOR TO BID OPENING. SUBSTITUTION REQUESTS MAY BE EMAILED TO TOM WILSON (twilson@afaengr.com)

REVISED 6-15-2023 FIXTURES A, B AND CHANGED CIRCURITY TO FIXTURES A

STATE OF KENTUCKY
THOMAS B. WILSON JR.
6017
LICENSED
PROFESSIONAL ENGINEER

SPECULATIVE BUILDING
FOR
LONDON - LAUREL COUNTY
ECONOMIC DEVELOPMENT AUTHORITY
LAUREL COUNTY, KENTUCKY

DATE	REVISION	BY

DESIGN DOCUMENTS
The Architect/Engineer disclaims any and all responsibility and liability for problems which arise from failure to follow these plans, specifications and the design intent they convey.

COPYRIGHT ©
The Architect/Engineer retains exclusive rights to these subject matter considered confidential by MSE of Kentucky, Inc. and on which MSE of Kentucky, Inc. has property rights. Neither receipt nor possession thereof confers or transfer any rights in or permission to use the subject matter or any part thereof for any purpose except as permitted by contract or other agreement, or to copy or disclose to others, or to use it for any purpose without the written permission of MSE of Kentucky, Inc.

PROJECT NO.	
DESIGNED BY	
DRAWN BY	
CHECKED BY	
REVIEWED BY	
DATE	
SCALE	

MSE OF KENTUCKY, INC.
Engineers
Architects
Planners
624 Wellington Way
Lexington, KY 40503
www.mselex.com
Phone: (859)223-5694
Fax: (859)223-2607

DRAWING NO.

ME-1

SHEET OF

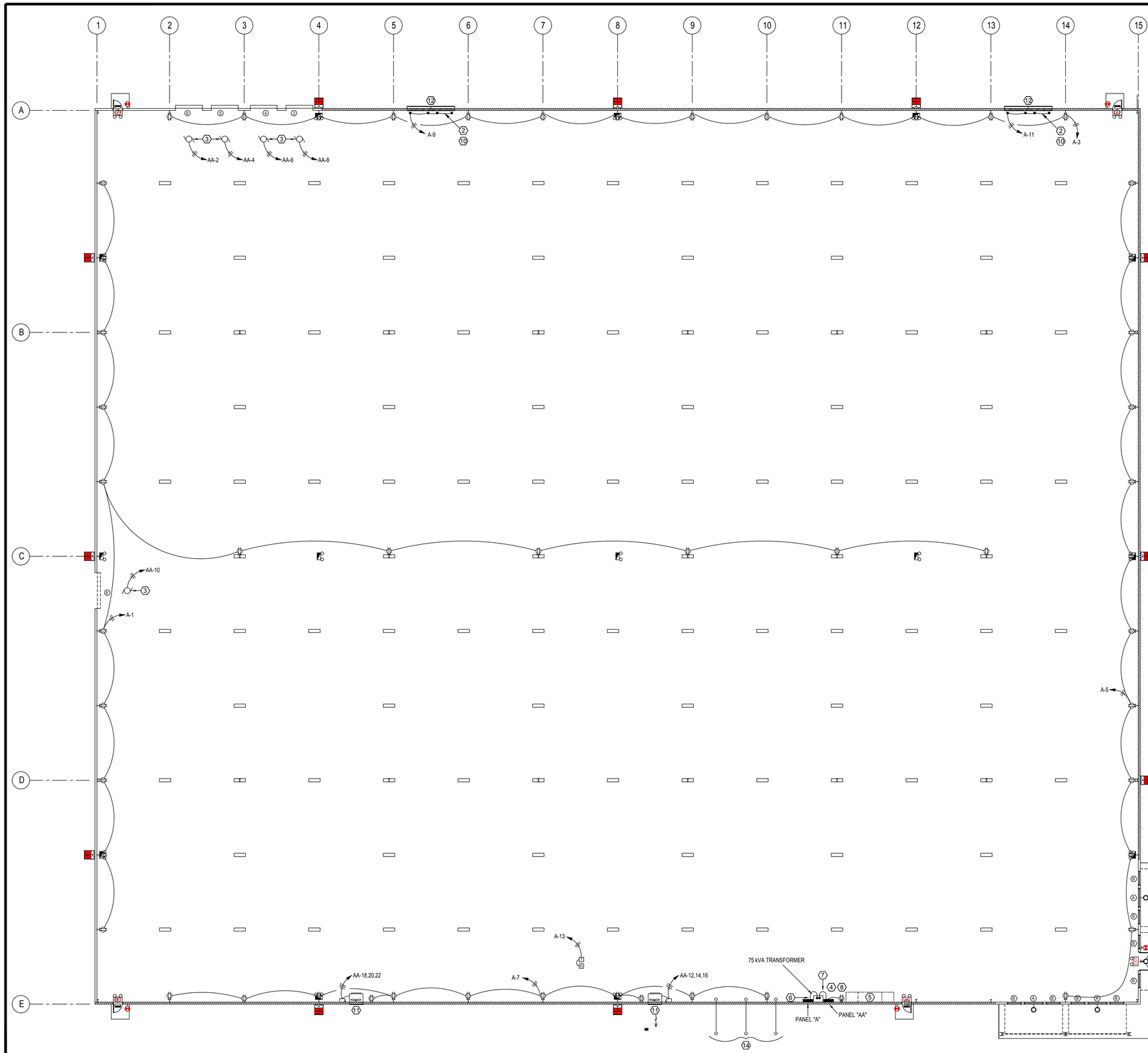

FIRST FLOOR POWER PLAN

SCALE: 1/16" = 1'-0"

PANEL "A"

VOLTAGE: 120/208 PHASE: 3Ø WIRE: 4 MAINS: 225 MAIN CKT BRKR: 200 A
TYPE: SQUARE D, NQOD MOUNT: SURFACE LOCATION: ELECTRICAL RM AIC: 10,000

CKT#	CB / POLE	WIRE SIZE	LOAD SERVED	KVA	LOAD A	LOAD B	LOAD C	KVA	LOAD SERVED	WIRE SIZE	CB / POLE	CKT#
1	20		RECEPTACLES	1.5	1.5			0.0	SPARE		20	2
3	20		RECEPTACLES	1.5		1.5		0.0	SPARE		20	4
5	20		RECEPTACLES	1.5			1.5	0.0	SPARE		20	6
7	20		RECEPTACLES	1.5	1.5			0.0	SPARE		20	8
9	20		LOUVER OPERATOR	0.1		0.1		0.0	SPARE		20	10
11	20		LOUVER OPERATOR	0.1			0.1	0.0	SPARE		20	12
13	20		THERMOSTAT	0.1	0.1			0.0	SPARE		20	14
15	20		SPARE	0.0		0.0		0.0	SPARE		20	16
17	20		SPARE	0.0			0.0	0.0	SPARE		20	18
19	20		SPARE	0.0	0.0			0.0	SPARE		20	20
21	20		SPARE	0.0		0.0		0.0	SPARE		20	22
23	20		SPARE	0.0			0.0	0.0	SPARE		20	24
25	20		SPARE	0.0	0.0			0.0	SPARE		20	26
27	20		SPARE	0.0		0.0		0.0	SPARE		20	28
29	20		SPARE	0.0			0.0	0.0	SPARE		20	30
31	20		SPARE	0.0	0.0			0.0	SPARE		20	32
33	20		SPARE	0.0		0.0		0.0	SPARE		20	34
35	20		SPARE	0.0			0.0	0.0	SPARE		20	36
37	20		SPARE	0.0	0.0			0.0	SPARE		20	38
39	20		SPARE	0.0		0.0		0.0	SPARE		20	40
41	20		SPARE	0.0			0.0	0.0	SPARE		20	42
					3.1	1.6	1.6					

TOTAL CONNECTED 6.3 KVA

PANEL "AA"

VOLTAGE: 480/277 PHASE: 3Ø WIRE: 4 MAINS: 225 MAIN CKT BRKR: 400 A
TYPE: SQUARE D, NQOD MOUNT: SURFACE LOCATION: ELECTRICAL RM AIC: 14,000

CKT#	CB / POLE	WIRE SIZE	LOAD SERVED	KVA	LOAD A	LOAD B	LOAD C	KVA	LOAD SERVED	WIRE SIZE	CB / POLE	CKT#
1	20		LIGHTS - GROUP 1	4.0	4.4			0.4	GARAGE DOOR		20	2
3	20		LIGHTS - GROUP 2	3.6		4.0		0.4	GARAGE DOOR		20	4
5	20		LIGHTS - GROUP 3	4.0			4.4	0.4	GARAGE DOOR		20	6
7	20		LIGHTS - GROUP 4	3.6	4.0			0.4	GARAGE DOOR		20	8
9	20		LIGHTS - GROUP 5	4.0		4.4		0.4	GARAGE DOOR		20	10
11	20		LIGHTS - GROUP 6	3.6			4.6	1.0				12
13	20		LIGHTS - GROUP 7	4.0	5.0			1.0	FAN		20/3	14
15	20		LIGHTS - GROUP 8	3.6		4.6		1.0				16
17	20		LIGHTS - GROUP 9	4.0			5.0	1.0				18
19	20		LIGHTS - GROUP 10	3.6	4.6			1.0	FAN		20/3	20
21	20		LIGHTS - GROUP 11	4.0		5.0		1.0				22
23	20		LIGHTS - GROUP 12	1.2			1.2	0.0	SPARE		20	24
25	20		LIGHTS - FRONT	1.0	1.0			0.0	SPARE		20	26
27	20		LIGHTS - BACK	1.0		1.0		0.0	SPARE		20	28
29	20		LIGHTS - RIGHTSIDE	1.1			1.1	0.0	SPARE		20	30
31	20		LIGHTS - LEFTSIDE	1.1	1.1			0.0	SPARE		20	32
33	20		LIGHTS - ENTRANCE	0.2		0.2		0.0	SPARE		20	34
35	20		SPARE	0.0			0.0	0.0	SPARE		20	36
37	20		SPARE	0.0	0.0			0.0	SPARE		20	38
39	20		SPARE	0.0		0.0		0.0	SPARE		20	40
41	20		SPARE	0.0			0.0	0.0	SPARE		20	42
					20.1	19.2	16.3					

TOTAL CONNECTED 55.6 KVA

REVISED 6-15-2023 FIXTURES A, B
AND CHANGED CIRCUITT 10 FIXTURES A

ELECTRICAL SHEET NOTES

1. BASE GROUND WIRE NO. 3/0 BARE COPPER BONDED TO EACH COLUMN AS SHOWN. TYPICAL. SEE GROUNDING DETAIL AT COLUMNS, THIS SHEET.
2. 120V LOUVER OPERATOR.
3. ELECTRICAL CONTRACTORS SHALL PROVIDE AND INSTALL ALL NECESSARY CONTROL WIRING TO DOOR OPENER AND SHALL MOUNT OPERATOR'S STATION AS REQUIRED.
4. ATTACH GROUND WRE TO LUGS OF INCOMING SERVICE PANEL AA.
5. CONCRETE HOUSE KEEPING PAD FOR FUTURE 2000 AMP SWITCHGEAR AND DISTRIBUTION SECTION. PAD DIMENSIONS SHALL BE 16'-6"X3'-7"X"10".
6. 4-#3/0 AND 1 #6 GND IN 2" RIGID METAL CONDUIT.
7. 3-#3, 1 #8 GROUND IN 1 1/4" RIGID METAL CONDUIT.
8. 75 KVA, 480-120/208 THREE PHASE TRANSFORMER. TRAPEZE MOUNT AT 10'-0" A.F.F.
9. ALL CIRCUITS SHALL BE RUN ON INSIDE OF THE BUILDING.
10. LOUVER SHALL BE FURNISHED & INSTALLED BY THE GENERAL CONTRACTOR, INSTALLED IN A FRAMED OPENING. MECHANICAL CONTRACTOR SHALL PROVIDE A MOTORIZED DAMPER, MINIMUM LEAKAGE, AND AN ELECTRICAL SHAFT MOUNTED LOUVER BLADE OPERATOR INTERLOCKED WITH FAN MOTOR. LOUVER OPERATOR SHALL BE LOCATED WITHIN THE WIDTH OF THE LOUVER. PROVIDE MULTIPLE OPERATORS TO SIMPLIFY LINKAGE.
11. OPENING THROUGH WALL FOR FAN SHALL BE FRAMED WITH STEEL STRUCTURAL MEMBERS APPROVED BY THE ARCHITECT. PROVIDE FLASHING AROUND WALL BOX FOR WEATHERPROOF INSTALLATION.
12. 16'X8' LOUVER AND DAMPER. 32,000 CFM. INSTALL 10' A.F.F.
13. 3-4" SCHEDULE 40 PVC CONDUITS, RUN 24" BELOW FINISHED GRADE. STUB OUT 6" INSIDE OF BUILDING AND CAP OFF. STUB OUT 6" ABOVE GROUND, 10 FEET FROM THE OUTSIDE OF BUILDING. PROVIDE PULL STRINGS FOR ALL CONDUITS.

ELECTRICAL LEGEND

- A-1 — HOMERUN TO PANEL AND CIRCUIT NUMBER "A-1" INDICATES PANEL "A", CIRCUIT #1
- A-1,3,5 — 3 PHASE HOMERUN TO PANEL AND CKT # "A-1,3,5" = PANEL "A", CIRCUITS #1,3,5
- CIRCUIT, CONDUIT OR WIRING
- CONDUIT BELOW FLOOR
- 0-10V DIMMING WIRING (PURPLE/GRAY)
- CONDUIT TURNED: UP, DOWN
- CAPPED CONDUIT/WIRE
- J — JUNCTION BOX
- DISCONNECT SWITCH
- $ — LIGHT SWITCH
- DUPLEX RECEPTACLE
- QUAD RECEPTACLE
- 30A/2P, OR 40A/2P RECEPTACLE FOR DRYER OR RANGE AS NOTED
- EQUIPMENT SPECIFIC OUTLET
- ELECTRICAL PANEL
- MOTOR OR EQUIPMENT
- 1 — REFERENCE NUMBER TO SHEET NOTE.
- WP — WEATHER PROOF
- GFI — GROUND-FAULT INTERRUPTER

STATE OF KENTUCKY
THOMAS B. WILSON, JR.
8077
LICENSED
PROFESSIONAL ENGINEER

SPECULATIVE BUILDING
FOR
LONDON - LAUREL COUNTY ECONOMIC DEVELOPMENT AUTHORITY
LAUREL COUNTY, KENTUCKY

DATE	REVISION	BY

DESIGN DOCUMENTS
The MSE of Kentucky, Inc. waives any and all responsibility and liability for problems which arise from failure to follow these plans, specifications and the design intent they convey.

COPYRIGHT ©
This document discloses subject matter consistent confidential by MSE of Kentucky, Inc. and on which MSE of Kentucky, Inc. has property rights. Neither receipt nor possession thereof confers or transfer any right in or license to the subject matter disclosed or any manufacture, reproduction, use or sale in connection therewith by others, or to use it for any purpose without the written permission of MSE of Kentucky, Inc.

PROJECT NO.	
DESIGNED BY	
DRAWN BY	
CHECKED BY	
REVIEWED BY	
DATE	
SCALE	

MSE OF KENTUCKY, INC.
Engineers
Architects
Planners
624 Wallington Way
Lexington, KY 40503
www.mselex.com
Phone: (859)223-5694
Fax: (859)223-2007

DRAWING NO.

ME-2

SHEET OF

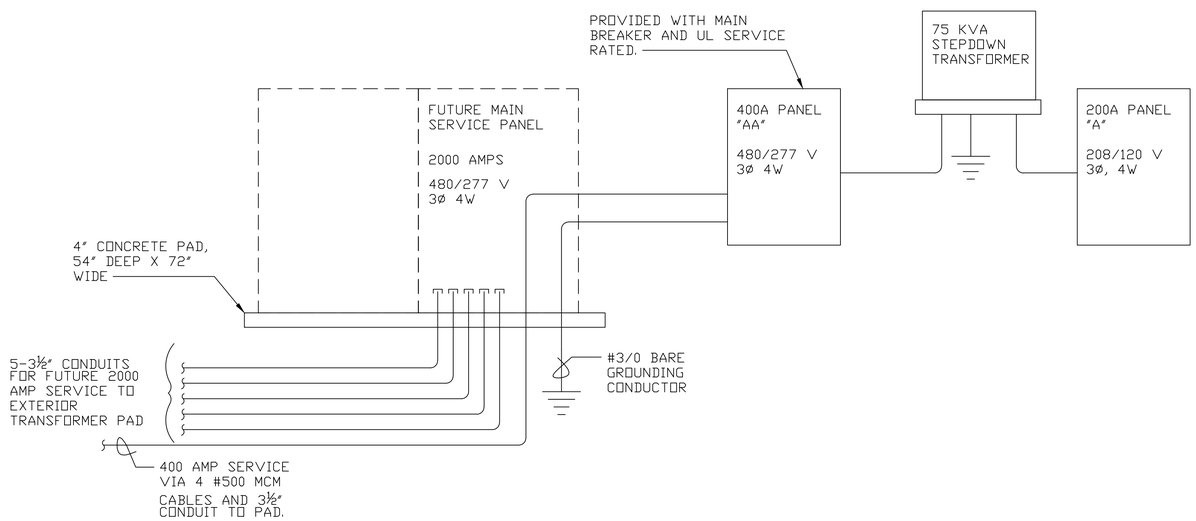

ELECTRICAL SERVICE FOR SPEC BUILDING
NO SCALE

GENERAL ELECTRICAL NOTES:

1. MINIMUM STANDARDS FOR ALL ELECTRICAL WORK SHALL BE THE LATEST REVISION OF THE NATIONAL ELECTRICAL CODE (NEC). WHENEVER AND WHEREVER OSHA, FEDERAL AND STATE LAWS, REGULATIONS AND DESIGN CRITERIA REQUIRE HIGHER STANDARDS THAN NEC, THESE LAWS, REGULATIONS, AND DESIGN CRITERIA SHALL BE FOLLOWED.

2. PROVIDE ELECTRICAL INSPECTION BY A LICENSED AND RECOGNIZED ELECTRICAL INSPECTOR. ALL COSTS INCIDENTAL TO ELECTRICAL INSPECTION SHALL BE BORNE BY THE CONTRACTOR. PRIOR TO FINAL ACCEPTANCE OF THE WORK AND RELEASE OF FINAL PAYMENT, DELIVER TO THE ENGINEER THE CERTIFICATE OF FINAL INSPECTION.

3. UNLESS INDICATED OTHERWISE, INSTALL ALL WIRING IN RIGID METAL CONDUIT, ELECTRICAL METALLIC TUBING, OR FLEXIBLE CONDUIT AS SPECIFIED. ALL CONDUIT SHALL BE 3/4" OR LARGER.

4. DO NOT INSTALL ELECTRICAL METALLIC TUBING UNDERGROUND, ON GRADE OR IN WET LOCATIONS, IN HAZARDOUS AREAS, OR FOR CIRCUITS OPERATING AT MORE THAN 600 VOLTS. METALLIC CONDUIT BURIED IN GROUND SHALL BE TREADED, RIGID STEEL CONDUIT ONLY. SCHEDULE 40 PVC MAY BE USED BELOW SLAB ON GRADE PROVIDE ALL RISERS THROUGH THE SLAB ARE MADE WITH RIGID STEEL CONDUIT.

5. UNLESS INDICATED OTHERWISE, PROVIDE NO. 12 AWG THWN OR LARGER FOR ALL BRANCH CIRCUIT CONDUCTORS. ALL CONDUCTORS SHALL BE 98% CONDUCTIVITY COPPER.

6. ALL ELECTRICAL EQUIPMENT SHALL BE UL LISTED FOR THE APPLICATIONS IN WHICH IT IS UTILIZED.

7. ALL CONDUIT SHALL BE INSTALLED CONCEALED EXCEPT IN DESIGNATED MECHANICAL ROOMS OR UNLESS INDICATED OTHERWISE HEREIN.

8. A SEPARATE, INSULATED EQUIPMENT GROUND WIRE SHALL BE RUN CONTINUOUS TO ALL EQUIPMENT, LIGHTING FIXTURES AND RECEPTACLES.

9. UNLESS INDICATED OTHERWISE, ALL INTERIOR AND EXTERIOR WIRING DEVICES SHALL BE INSTALLED FLUSH IN WALL. ELECTRICAL BOX LOCATIONS SHOWN ON THE DRAWINGS ARE APPROXIMATE UNLESS DIMENSIONED.

10. ALL EQUIPMENT DISCONNECT SWITCHES, MOTOR STARTERS, PUSHBUTTON STATIONS, PANELBOARDS AND SWITCHBOARDS SHALL BE CLEARLY IDENTIFIED USING ENGRAVED LAMACOID PLATES AS SPECIFIED.

11. UNLESS INDICATED OTHERWISE, LOCATE STARTERS WITHIN SIGHT OF THEIR ASSOCIATED MOTORS. WHERE STARTER IS NOT WITHIN SIGHT OF MOTOR, PROVIDE A DISCONNECT DEVICE WITHIN SIGHT OF THE MOTOR. UNLESS INDICATED OTHERWISE, DISCONNECT DEVICES SHALL BE EITHER AN UNFUSED SWITCH OR NON-AUTOMATIC CIRCUIT BREAKER. SWITCHES SHALL BE UNFUSED AND CIRCUIT BREAKERS SHALL BE WITHOUT OVERCURRENT DEVICES.

12. THE ELECTRICAL CONTRACTOR SHALL PROVIDE ALL POWER WIRING TO ALL MOTORS AND ALL LINE VOLTAGE FEEDERS TO ALL FACTORY CONTROL PANELS FURNISHED UNDER DIVISION 15. THE ELECTRICAL CONTRACTOR SHALL ALSO PROVIDE MOTOR STARTERS (3-PHASE) OR MOTOR RELAYS (SINGLE PHASE) AND DISCONNECTS FOR ALL MECHANICAL EQUIPMENT WHICH HAS NOT BEEN SPECIFIED TO HAVE FACTORY CONTROL PANELS OR FACTORY-MOUNTED MOTOR CONTROLS.

13. IDENTIFY CIRCUITS CONTAINED IN EACH JUNCTION BOX ON EXTERIOR COVER WITH A PERMANENT MARKER, TAG EACH CONDUCTOR INSIDE.

14. CHECK WACED AND CONNECTED. RELOCATION OF MATERIAL OR EQUIPMENT NECESSITATED BY FAILURE TO COORDINATE WORK SHALL BE AT NO COST TO THE OWNER.

15. PROVIDE FIRESTOPPING AT ALL FIRE SEPARATION WALLS AND FLOOR PENETRATIONS. REFER TO ARCHITECTURAL PLANS FOR RATED LOCATIONS.

16. BREAKERS FOR BRANCH PANELS SHALL BE MOLDED CASE BOLT-IN TYPE. SINGLE BREAKERS IN BRANCH PANELS SHALL HAVE AN INTERRUPTING CAPACITY OF NOT LESS THAN 10,000 AMP. SYMMETRICAL AT 208/120 VOLTS AND 14,000 AMP. SYMMETRICAL AT 480/277 VOLTS.

17. ALL FUSES SHALL BE CURRENT LIMITING WITH 200,000 AMP. INTERRUPTION CAPACITY. ALL FUSES SHALL BE VOLTAGE RATED FOR THE SYSTEM IN WHICH THEY ARE INSTALLED. MANUFACTURERS: BUSSMAN, GE, GOULD SHAWMUT OR LITTELFUSE.

18. LIGHT FIXTURES SHALL CONSIST OF, BUT NOT LIMITED TO LAMPS, LAMPHOLDERS, REFLECTORS, DRIVERS, STARTERS AND WIRING. LED LAMPS SHALL BE F34T8 RAPID START ENERGY SAVING TYPE.

19. EAITH OTHER TRADES ON SCOPE OF THEIR WORK AND COORDINATE ON ALL LOCATIONS OF VARIOUS ITEMS OF EQUIPMENT AND OUTLETS BEFORE THEY ARE FINALLY PLCH DRIVER SHALL BE ENERGY SAVING TYPE AND SHALL MEET REQUIRMENTS OF CERTIFIED DRIVER MANUFACTURERS.

20. NOT USED.

21. SET LIGHTING FIXTURES AND EQUIPMENT PLUMB, SQUARE, AND LEVEL AND SECURE TO STRUCTURAL SUPPORT MEMBERS OF THE BUILDING. RECESSED AND SEMI-RECESSED FIXTURES SHALL BE SUPPORTED INDEPENDENT OF SUSPENDED CEILING SYSTEM.

MECHANICAL EQUIPMENT

EXHAUST FAN SHALL BE AN ACME MODEL # DCH42
19330 CFM • 0.15 S.P., 2.0 H.P., 574 RPM (FAN), 480/60/3ϕ MOTOR.
FURNISH WITH FAN WALL HOUSING MODEL # WAGH52, SHUTTER MODEL # WBP48, AND PROTECTIVE SCREEN. COMPARABLE EQUIPMENT BY COOK, GREENHECK, OR EQUAL WILL BE ACCEPTABLE.

FURNISH AND INSTALL A COMBINATION LOUVER AND DAMPER 6" DEEP, EXTRUDED ALUMINUM, 45° BLADE, WITH ALUMINUM BIRD SCREEN. BLADES SHALL BE PROVIDED WITH SEALS FOR MINIMUM AIR LEAKAGE.
LOUVERS SELECTED: LOUVERS + DAMPERS MODEL DCL-67
COMPARABLE LOUVERS MFG. BY RUSKIN, AIROLITE, OR EQUAL WILL BE ACCEPTABLE.

EXTERIOR LOUVERS AND FAN SHUTTERS TO BE SUPPLIED WITH COLOR WHICH MATCHES BUILDING COLOR.

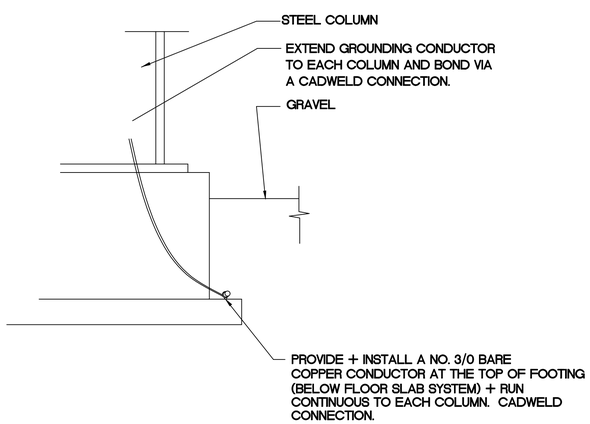

GROUNDING DETAIL AT COLUMNS
NO SCALE

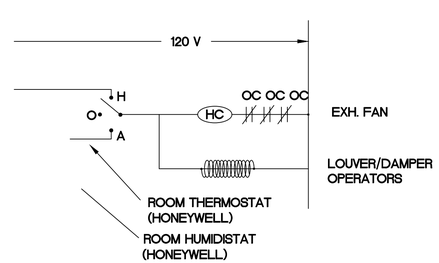

EXHAUST FAN WIRING DETAIL

SPECULATIVE BUILDING
FOR
LONDON - LAUREL COUNTY
ECONOMIC DEVELOPMENT AUTHORITY
LAUREL COUNTY, KENTUCKY

DATE	REVISION	BY

DESIGN DOCUMENTS
The ideas and designs incorporated herein, whether in whole or in part, shall not matter considered confidential by MSE of Kentucky, Inc. and on which MSE of Kentucky, Inc. has proprietary rights. Neither receipt nor possession thereof confers or transfer any right in or license to use the ideas and designs herein, or to reproduce, exhibit or disclose to others, or to use it for any purpose without the written permission of MSE of Kentucky, Inc.
COPYRIGHT ©

PROJECT NO.
DESIGNED BY
DRAWN BY
CHECKED BY
REVIEWED BY
DATE
SCALE

MSE OF KENTUCKY, INC.
Engineers
Architects
Planners
624 Wallington Way
Lexington, KY 40503
www.mselex.com
Phone: (859)223-5694
Fax: (859)223-2607

STATE OF KENTUCKY
THOMAS B. WILSON, JR.
8077
LICENSED
PROFESSIONAL ENGINEER

DRAWING NO.
ME-3
SHEET OF